Non-Contact Infrared Thermometers

DT-8833

Operation Manual

TABLE OF CONTENTS

INTRODUCTION……3

FEATURES…… 3

WIDE RANGE APPLICATION ……4

SAFETY…… 4

DISTANCE & SPOT SIZE…… 5

SPECIFICATIONS…… 6

FRONT PANEL DESCRIPTION…… 8

INDICATOR…… 9

BUTTONS……9

MEASURMENT OPERATION……12

BATTERY REPLACEMENT……..15

NOTES……..15

MAINTENANCE & CLEARING…… 19

INTRODUCTION

Thank you for purchase of the 8833 IR Thermometer. This device offers non-contact (infrared) temperature measurements capability. The built-in laser pointer increases target accuracy while the backlight LCD and handy push-buttons combine for convenient, ergonomic operation. Type K thermocouple functionality is also built-in. Proper use and care of this meter will provide years of reliable service.

FEATURES:

- Precise non-contact temperature measurement
- Type K temperature Measurement
- Unique flat surface, modern housing design
- Built-in laser pointer
- Automatic Data Hold
- Automatic Power Off
- ℃/℉ switch
- Emissivity Digitally adjustable from 0.10 to 1.0
- MAX,MIN,DIF, AVG record
- LCD with Backlight
- Automatic range selection
- Resolution 0.1°C(0.1°F)

- Trigger lock
- High and Low alarm
- Obtain Emissivity

WIDE RANGE APPLICATION:

Food preparation, Safety and Fire inspectors, Plastic molding, Asphalt, Marine and Screen printing, measure ink and Dryer temperature, HVAC/R, Diesel and Fleet maintenance.

1. ⚠ SAFETY

- Use extreme caution when the laser beam is turned on.
- Do not let the beam enter your eye, another person's eye or the eye of an animal.
- Be careful no to let the beam on a reflective surface strike your eye.
- Do not allow the laser light beam impinge on any gas which can explode.

Distance & Spot Size

As the distance (D) from the object increases, the spot size (S) of the area measured by the unit becomes larger. The relationship between distance and spot size for each unit is listed below. The focal point for each unit is 914mm (36”). The spot sizes indicate 90% encircled energy.

Fig: 1

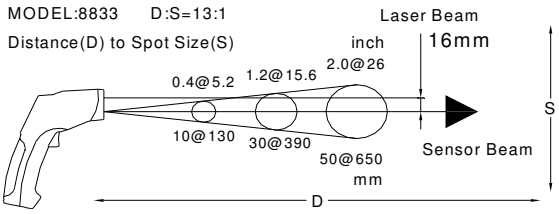

2. SPECIFICATIONS

TK measurement:	TK Temperature range	
	-50 to 1370 °C (-58 to 2498℉)	
Resolution	-50 to 1370 °C	0.1 °C
	-58 to 1999℉	0.1℉
	2000 to 2498℉	1℉
Accuracy	-50 to 1000 °C	± 1.5% of reading ± 3℃(±℉)
	1000 to 1370 °C	± 1.5% of reading ± (±3.6℉)

IR Measurement:		
IR Temperature range		-50 to 800 °C (-58 to 1472℉)
D: S		13:1
Resolution		0.1 °C (0.1℉)
Accuracy	-50 to -20℃(-58 to -4℉):	±5 °C (±9℉)
	-20 to 200℃(-4 to 392℉):	± 1.5% of reading ± 2℃(±3.6℉);
	200 to 538℃ (392 to 1000℉):	± 2.0% of reading ±2℃(±3.6℉);
	538 to 800℃(1000 to 1472℉):	± 3.5% of reading ± 5℃(±9℉)

Response time	less than 1 second
Spectral response	8~14um
Emissivity	Digitally adjustable from 0.10 to 1.0
Over range indication	LCD will show “-0L”,”0L”
Polarity	Automatic (no indication for positive polarity);Minus (-) sign for negative polarity
Diode laser	output <1mW, Wavelength 630~670nm, Class 2(II) laser product
Operating temp.	0 to 50℃(32 to 122℉)
Storage temp.	–20 to 60℃ (-4 to 140℉)
Relative humidity	10%~90%RH operating, <80%RH storage
Power supply	9V battery, NEDA 1604A or IEC 6LR61, or equivalent
Weight	290g (10.2 oz.)
Size	100 x 56 x 230mm (3.9 x 2.2 x 9.0”)
Safety	“ CE ” Comply with EMC

Note:

- **Accuracy:** Given at 18 to 28 ^{o}C (64 to 82 ℉), less than 80 % RH.
- **Field of View:** Make sure that the target is larger than the unit's spot size. The smaller the target, the closer you should be to it. When accuracy is critical, make sure the target is at least twice as large as the spot size.

3. FRONT PANEL DESCRIPTION

① IR sensor
② Laser pointer beam
③ LCD Display
④ down button
⑤ up button
⑥ mode button
⑦ laser/backlight button
⑧ Measurement Trigger
⑨ Handle Grip
⑩ Battery Cover

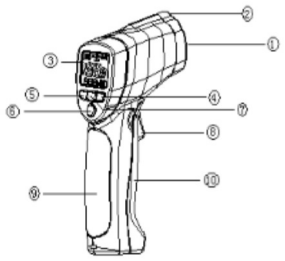

4. INDICATOR

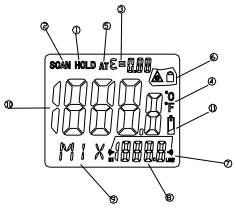

① Data hold

② Measuring indication

③ Emissivity symbol and value

④ ℃/℉ symbol

⑤ Auto obtain Emissivity

⑥ lock and laser" on" symbols

⑦ High alarm and low alarm symbol

⑧ Temperature values for the MAX, MIN, DIF, AVG HAL, LAL. And TK

⑨ Symbols for EMS MAX, MIN, DIF, AVG, HAL, LAL and TK

⑩ Current temperature value

⑪ Low battery

5. Buttons

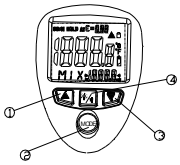

① **pbutton(forEMS,HAL,LAL)**

② **MODE button**

(for cycling through the mode loop)

③ **Down button (for EMS,HAL,LAL)**

④ **Laser/Backlight on/off button**

(pull trigger and press button to activate laser/backlight)

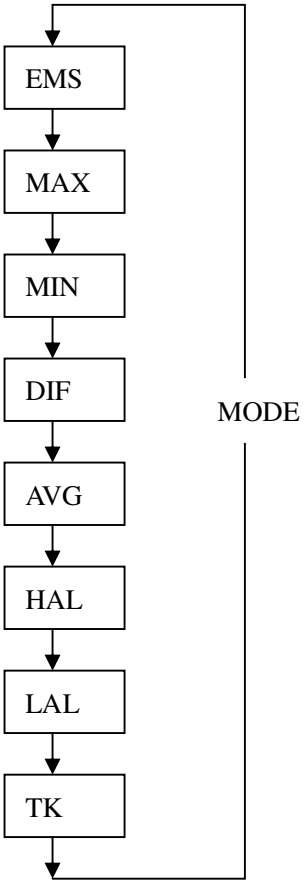

ODE Button Function

The infrared thermometer measures Maximum (MAX), Minimum (MIN), Differential (DIF), and Average (AVG) Temp. Each time you take a reading. This data is stored and can be recalled with the MODE button until a new measurement is taken. When the trigger is pulled again, the unit will begin measuring in the last mode selected.

Pressing the MODE button also allows you to access the High Alarm(HAL), Low

Alarm(LAL),Emissivity(EMS).Each time you press MODE, you advance through the mode cycle.

Pressing the MODE button also allows you to access the Type k Temp. Measurement.

The diagram shows the sequence of functions in the MODE cycle.

Switching C/F , LOCK ON/OFF and SET ALARM.

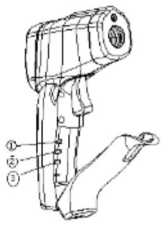

① **C/F**

② **LOCK ON/OFF**

③ **SET ALARM**

Select the temperature units (°C or °F) by using the **°C/°F** switch

To lock the unit on for continuous measurement, slide the middle switch **LOCK ON/OFF** right. If the trigger is pulled while the unit is locked on, the laser and backlight will be turned on if they have been activated. When the unit is locked on, the backlight and laser will remain on unless it is turned off using the **Laser/Backlight** button on the keypad.

To activate the alarms, please slide the bottom switch **SET**

ALARM right.

To set values for the High Alarm (**HAL**), Low Alarm (**LAL**) and Emissivity (**EMS**), firstly active the display by pulling the trigger or pressing the **MODE** button, then press the **MODE** button until the appropriate code appears in the lower left corner of the display, press the **UP** and **down** buttons to adjust the desired values.

6. MEASURMENT OPERATION

① Hold the meter by its **Handle Grip** and point it toward the surface to be measured.

② Pull and hold the **Trigger** to turn the meter on and begin testing. The display will light if the battery is good. Replace the battery if the display does not light.

③ While measuring, the SCAN display icon will appear in the upper left corner of the LCD.

④ Release the Trigger and the HOLD icon will appear on the LCD indicating that the reading is being held.

⑤ The meter will automatically power off after approximately 7 seconds after the trigger is released.(Unless the unit is locked on)

How to obtain Emissivity?

In the EMS mode, press and hold the Laser/Backlight button until the “EMS” icon on the left side of LCD blinking. At this time, “ ε = ––” will appear at the upper side of the LCD; IR temperature value will be in the middle of LCD; and Type K temperature value is at the lower side of the LCD.

Contact the Type K probe to the object surface and test the temperature of same point with IR measurement. After both values are stable, press UP or DOWN button for confirmation. Then, emissivity of the object will be shown at the upper side of the LCD.

Press MODE button or trigger to enter normal measurement.

Note:

1. When the IR value is not corresponding to the TK value, or IR and TK tested the different points, no emissivity will be obtainable or a wrong emissivity will be obtained.
2. The temperature of the target should be higher than the environment temperature. Normally, 100℃ is

suitable for obtaining a higher accuracy emissivity.

After obtaining the emissivity, if the difference between IR value (in the middle of LCD) and TK value (at the lower side of LCD) is too big, the obtained emissivity will be incorrect. It's necessary to obtain a new emissivity.

Note: Measurement considerations

Holding the meter by its handle, point the IR Sensor toward the object whose temperature is to be measured. The meter automatically compensates for temperature deviations from ambient temperature. Keep in mind that it will take up to 30 minutes to adjust to wide ambient temperatures are to be measured followed by high temperature measurements, some time (several minutes) is required after the low (and before the high) temperature measurements are made.

This is a result of the cooling process, which must take place for the IR sensor.

7. BATTERY REPLACEMENT

① As battery power is not sufficient, LCD will display " ▭ " replacement with one new 9V battery is required.

② Open battery cover, then take out the battery from instrument and replace with a new 9-Volt battery and place the battery cover back.

8. NOTES:

- ***How it Works***

  Infrared thermometers measure the surface temperature of an object. The unit's optics sense emitted, reflected, and transmitted energy, which is collected and focused onto a detector. The unit's electronics translate the information into a temperature reading, which is display on the unit. In units with a laser, the laser is used for aiming purposes only.

- ***Field of View***

  Make sure that the target is larger than the unit's spot size. The smaller the target, the closer you should be to it. When accuracy is critical, make sure the target is at least twice as large as the spot size.

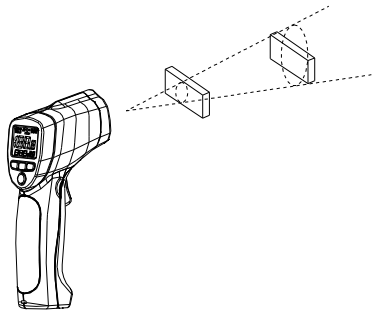

Distance & Spot Size

As the distance (D) from the object increases, the spot size (S) of the area measured by the unit becomes larger. See: **Fig: 1**.

- ***Locating a hot Spot***

  To find a hot spot aim the thermometer outside the area of interest, then scan across with an up and down motion until you locate hot spot.

- ***Reminders***

① Not recommended for use in measuring shiny or polished metal surfaces (stainless steel, aluminum, etc.).See **Emissivity**

② The unit cannot measure through transparent surfaces such as glass. It will measure the surface temperature of the glass instead.

③ Steam, dust, smoke, etc., Can prevent accurate measurement by obstructing the unit's optics.

- ***Emissivity***

  Emissivity is a term used to describe the energy-emitting characteristics of materials.

  Most (90% of typical applications) organic materials and painted or oxidized surfaces have an emissivity of 0.95 (pre-set in the unit). Inaccurate readings will result from measuring shiny or polished metal surfaces. To compensate, cove the surface to be measured with masking tape or flat black paint. Allow time for the tape to reach the same temperature as the material underneath it. Measure the temperature of the tape or painted surface.

Emissivity Values

Substance	Thermal emissivity	Substance	Thermal emissivity
Asphalt	0.90 to 0.98	Cloth (black)	0.98
Concrete	0.94	Human skin	0.98
Cement	0.96	Lather	0.75 to 0.80
Sand	0.90	Charcoal (powder)	0.96
Earth	0.92 to 0.96	Lacquer	0.80 to 0.95
Water	0.92 to 0.96	Lacquer (matt)	0.97
Ice	0.96 to 0.98	Rubber (black)	0.94
Snow	0.83	Plastic	0.85 to 0.95
Glass	0.90 to 0.95	Timber	0.90
Ceramic	0.90 to	Paper	0.70 to 0.94

Marble	0.94	Chromium oxides	0.81
Plaster	0.80 to 0.90	Copper oxides	0.78
Mortar	0.89 to 0.91	Iron oxides	0.78 to 0.82
Brick	0.93 to 0.96	Textiles	0.90

9. MAINTENANCE & CLEARING:

- Repairs or serving aren't covered in this manual should only be performed by qualified personnel.
- Periodically wipe the case with a dry cloth. Don't use abrasives or solvents on this instrument.
- When serving, use only specified replacement parts.